SAMSUNG CONFIDENTIAL
THIS DOCUMENT CONTAINS CONFIDENTIAL
PROPRIETARY INFORMATION THAT IS
SAMSUNG ELECTRONICS CO'S PROPERTY.
DO NOT DISCLOSE TO OR DUPLICATE FOR OTHERS
EXCEPT AS AUTHORIZED BY SAMSUNG.

# M33_5G REV03

SM-M336B/BU
Common

## 2021.12.13

**Sheet01 : GSM / WCDMA / LTE / NR RF**
**Sheet02 : TRANSCEIVER, SUB ANT**
**Sheet03 : CONNECTIVITY(BT/WIFI/FM), NFC**
**Sheet04 : AP(S5E8825-INTERFACE,GPIO)**
**Sheet05 : AP(POWER), MEM( uMCP)**
**Sheet06 : PMIC(S2MPU13,S2MPU14), IF PMIC**
**Sheet07 : AUDIO Codec, SENSOR, SIM, SD**
**Sheet08 : CAMERA**
**Sheet09 : DISPLAY PMIC, C2C**

Engineer:
Drawn by:
R&D CHK:
DOC CTRL CHK:
MFG ENGR CHK:
QA CHK:
TITLE: M33_5G
Size:
REV
Drawing Number:
Page:
Changed by: user33
Date Changed:
Time Changed:

SAMSUNG CONFIDENTIAL
THIS DOCUMENT CONTAINS CONFIDENTIAL PROPRIETARY INFORMATION THAT IS SAMSUNG ELECTRONICS CO'S PROPERTY. DO NOT DISCLOSE TO OR DUPLICATE FOR OTHERS EXCEPT AS AUTHORIZED BY SAMSUNG.

| | |
|---|---|
| 2G | 850/ 900/ 1800 / 1900 |
| 3G | W1/ 2/ 4/ 5/ 8 |
| FDD | B1/2/3/4/5/7/8/12/17/20/26/28/32/66 |
| TDD | B38/40/41 |
| NR | n1/3/5/7/8/20/28/38/40/41/66/78/79 |

| | |
|---|---|
| MIMO(4x4) | n1/3/7/38/41/66/78/79 |
| SRS | 1T4R, n41/78/79 |
| DL CA | |
| UL CA | Not Support |
| HPUE | Not Support |

# MAIN ANT1 LB

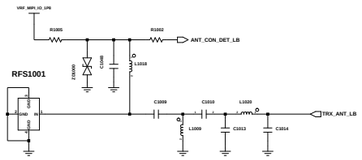


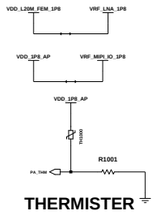


THERMISTER

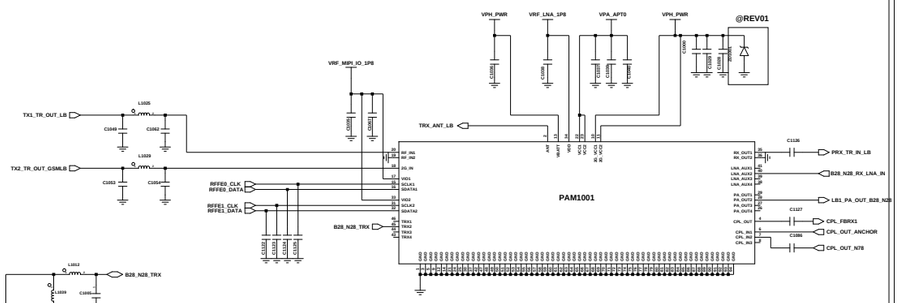


B28/N28

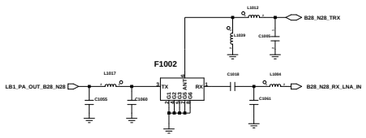


LB L-PAMiD

# MAIN ANT2

MB, HB

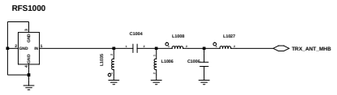


KOR DELETE

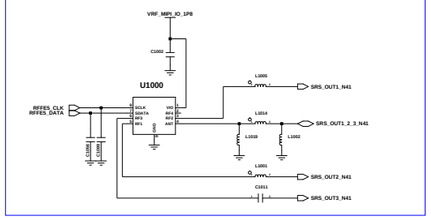


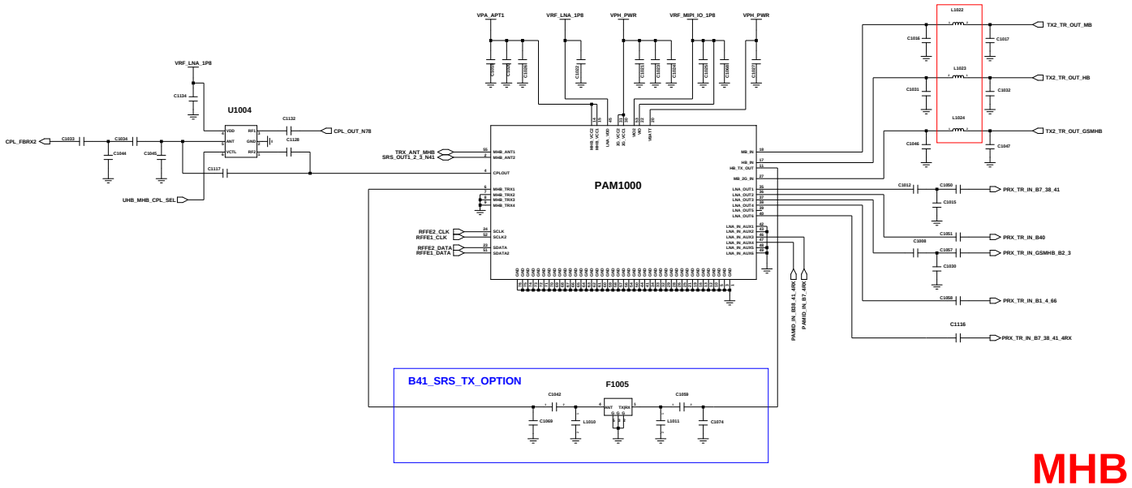


MHB L-PAMiD

| LTE | NR | LTE PA | NR PA |
|---|---|---|---|
| LB | LB | Not Support | |
| LB | MB | LB L-PAMiD | MHB L-PAMiD |
| LB | HB | LB L-PAMiD | MHB L-PAMiD |
| LB | UHB | LB L-PAMiD | MHB L-PAMiD |

| LTE | NR | LTE PA | NR PA |
|---|---|---|---|
| MB | LB | MHB L-PAMiD | LB L-PAMiD |
| MB | MB | MHB Anchor | MHB L-PAMiD |
| MB | HB | MHB Anchor | MHB L-PAMiD |
| MB | UHB | MHB Anchor | MHB L-PAMiD |

| LTE | NR | LTE PA | NR PA |
|---|---|---|---|
| HB | LB | MHB L-PAMiD | LB L-PAMiD |
| HB | MB | MHB Anchor | MHB L-PAMiD |
| HB | HB | Not Support | |
| HB | UHB | MHB Anchor | MHB L-PAMiD |

# APT0 LB NR / MHB Anchor

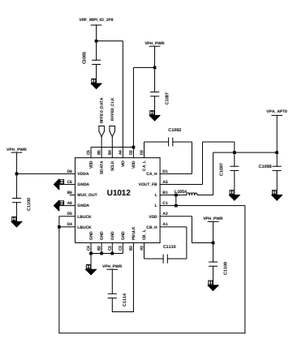


# APT1 MHB NR / UHB NR

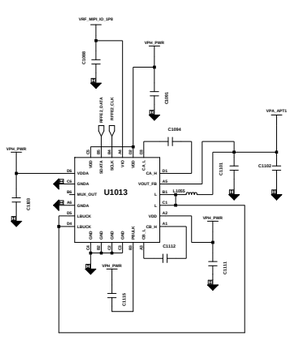


# SUB5

HB PRX_MIMO
N78 PRX_MIMO

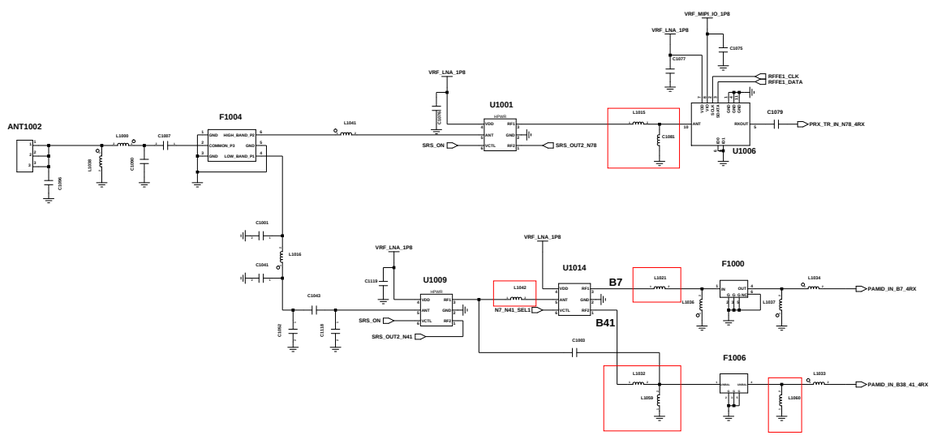


| | |
|---|---|
| Engineer: | M33 5G |
| Drawn by: | |
| R&D Cont.: | TITLE: RF PAM/FEM |
| DOC CTRL Cont.: | |
| MFG MAGR Cont.: | |
| Q-A Cont.: | REV: Drawing Number: |

SAMSUNG CONFIDENTIAL
THIS DOCUMENT CONTAINS CONFIDENTIAL
AND PROPRIETARY INFORMATION OF
SAMSUNG ELECTRONICS. THIS PROPERTY
DO NOT DISCLOSE TO OR DUPLICATE FOR OTHERS
EXCEPT AS AUTHORIZED BY SAMSUNG.

# TRANSCEIVER (S5511)

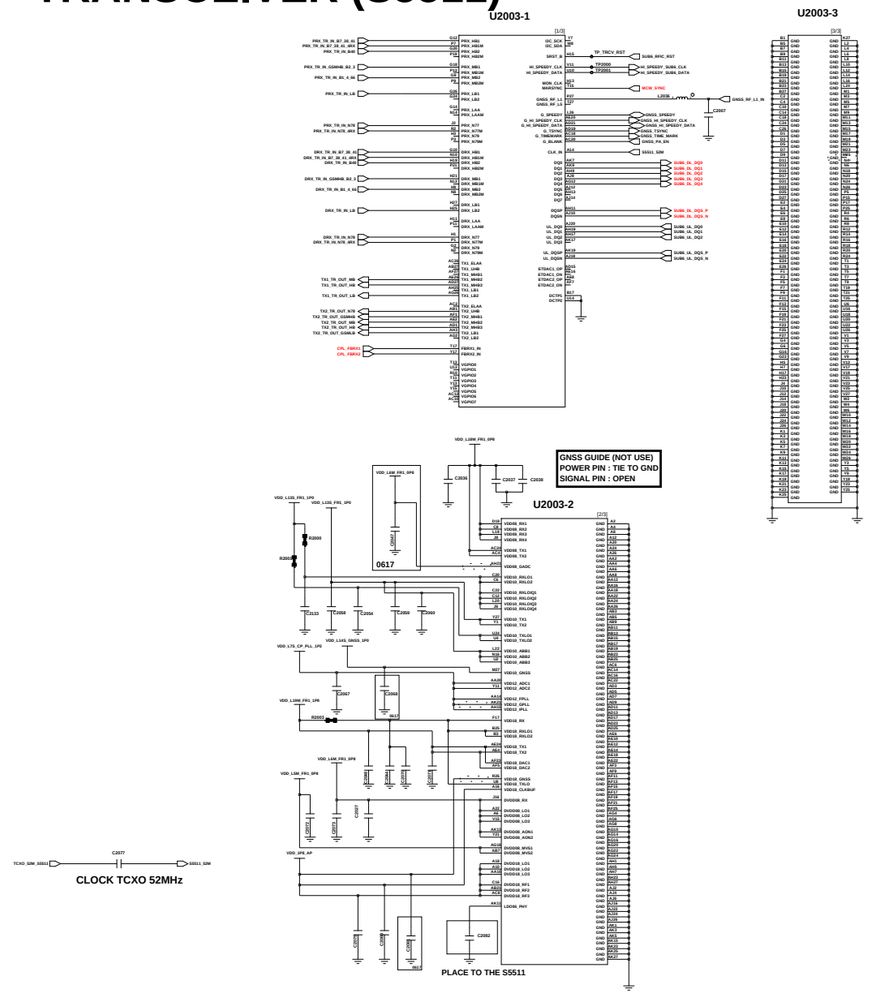


# SUB ANT1

## LMHB DRX, MHB Anchor

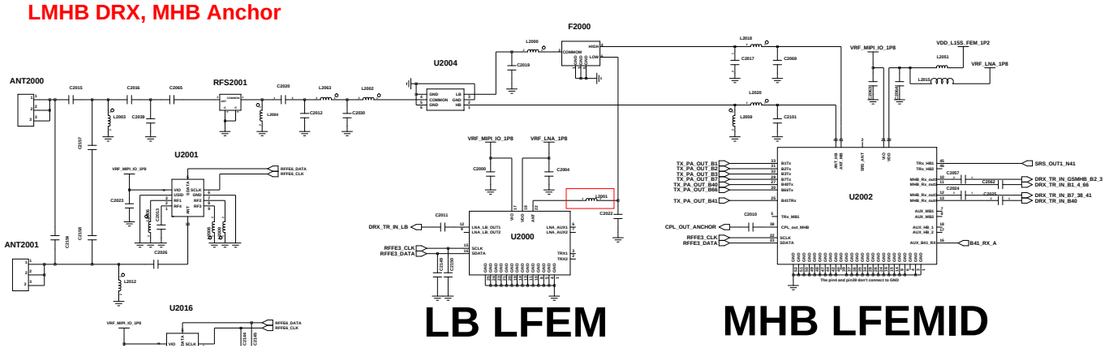


# SUB ANT4

## N78 DRX
## HB_DRX_MIMO

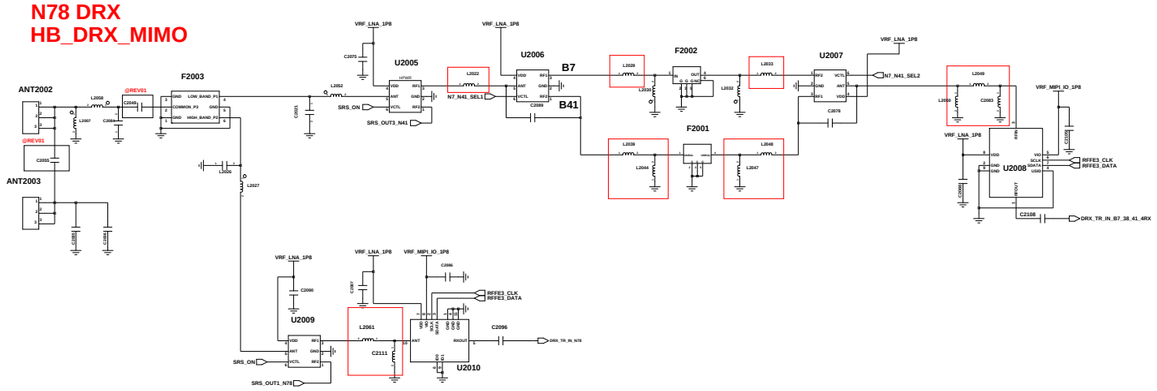


# SUB ANT3

## N78 TRX

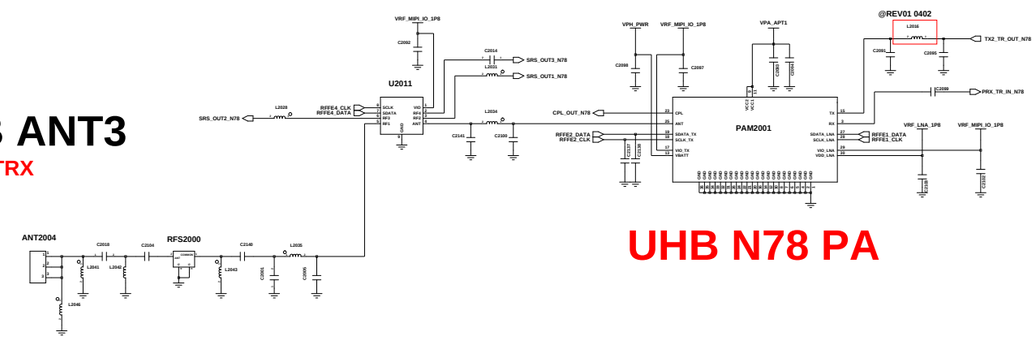


# SUB ANT2

## GPS, WIFI, N78_DRX_MIMO

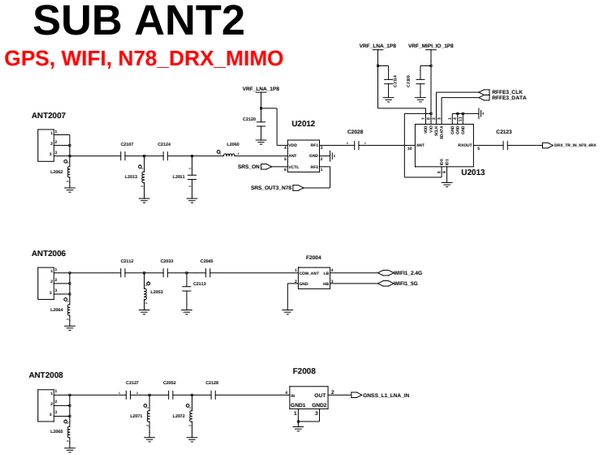


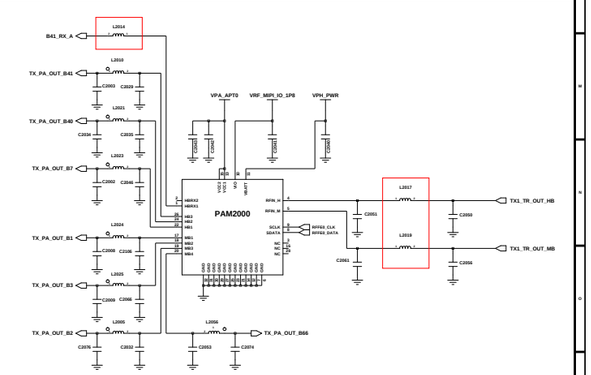


| | |
|---|---|
| Engineer: | M33 5G |
| Design Sys: | |
| Prod Code: | TITLE: RF TRCV/PAM/APT |
| DOC Code: | |
| MFG Model Code: | |

| Changed by | Date Changed | Time Changed | QA Code | REV | Drawing Number |
|---|---|---|---|---|---|
| | | | | | |

SAMSUNG CONFIDENTIAL
THIS DOCUMENT CONTAINS CONFIDENTIAL
PROPRIETARY INFORMATION THAT IS
SAMSUNG ELECTRONICS CO'S PROPERTY.
DO NOT DISCLOSE TO OR DUPLICATE FOR OTHERS
EXCEPT AS AUTHORIZED BY SAMSUNG.

# WIFI/BT/FM

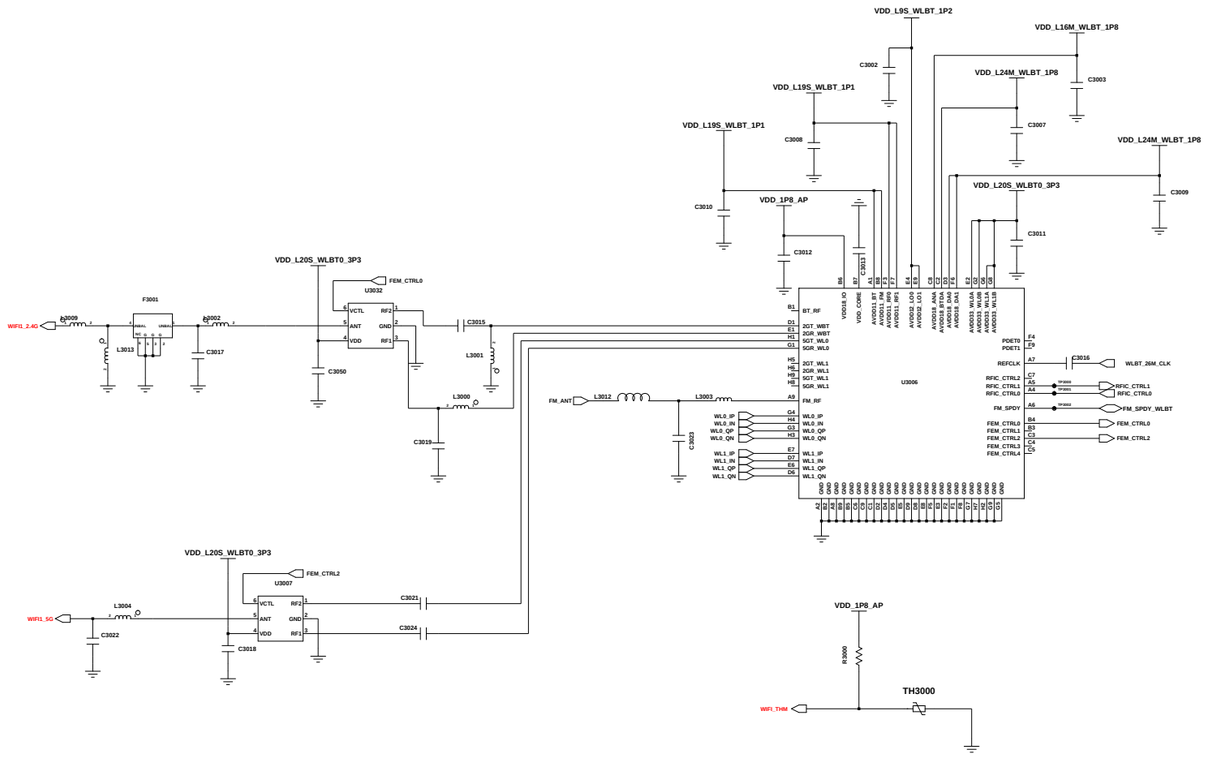


# MST

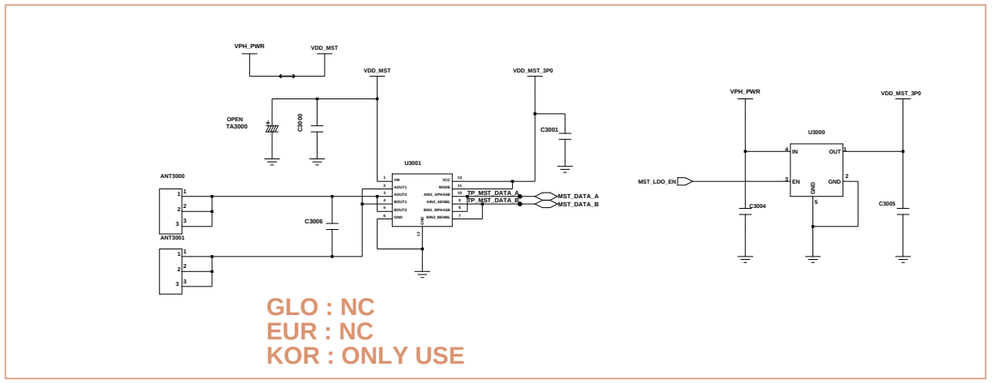


## LCD SMR gasket

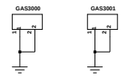


## GND

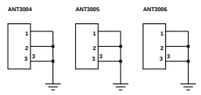


# NFC

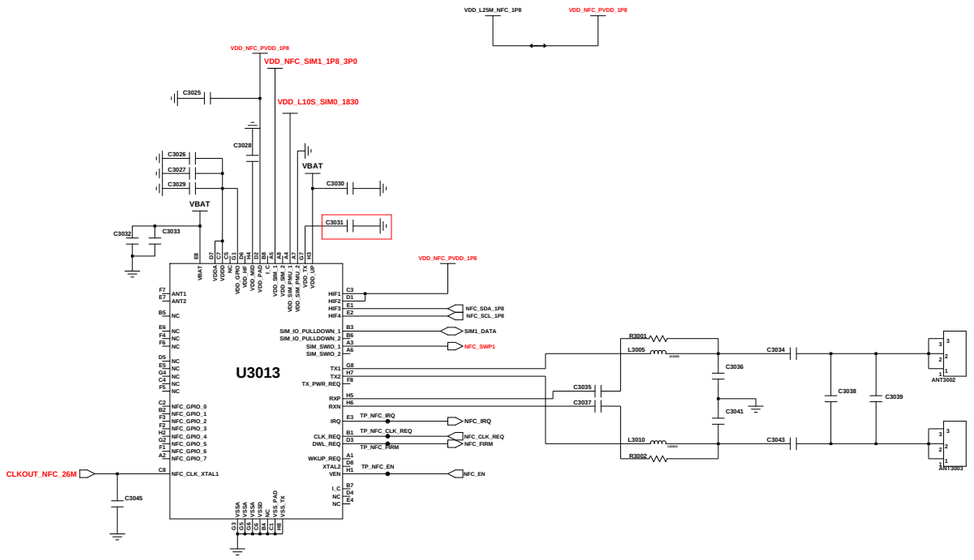


# GPS L1 / GNSS/BEIDOU

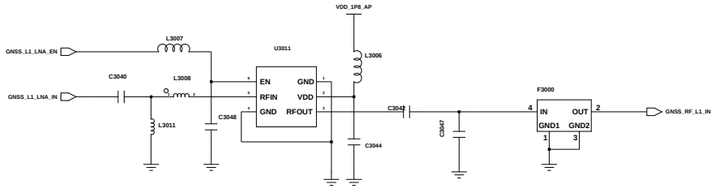


| | | | |
|---|---|---|---|
| Engineer: | M33 5G | | |
| Drawn by: | | | |
| R&D CHK: | TITLE: WIFI/NFC/GPS | Size: | |
| DOC CTRL CHK: | | | |
| MFG ENGR CHK: | | | |
| Changed by: user118 | Date Changed: | Time Changed: | QA CHK: |
| REV | Drawing Number: | Page: 3 | |

**SAMSUNG CONFIDENTIAL**
THIS DOCUMENT CONTAINS CONFIDENTIAL
PROPRIETARY INFORMATION THAT IS
SAMSUNG ELECTRONICS CO'S PROPERTY.
DO NOT DISCLOSE TO OR DUPLICATE FOR OTHERS
EXCEPT AS AUTHORIZED BY SAMSUNG.

# PAPAYA

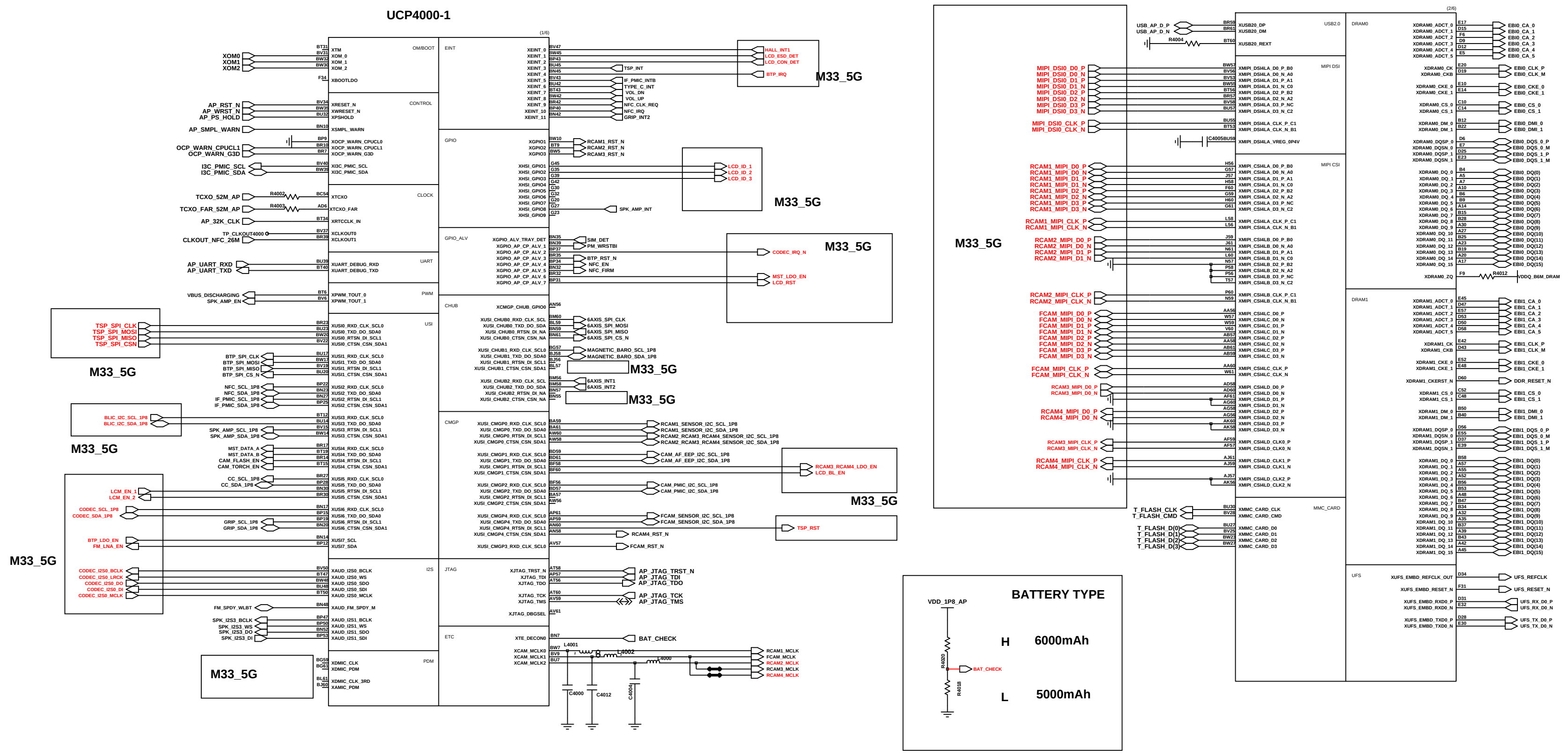


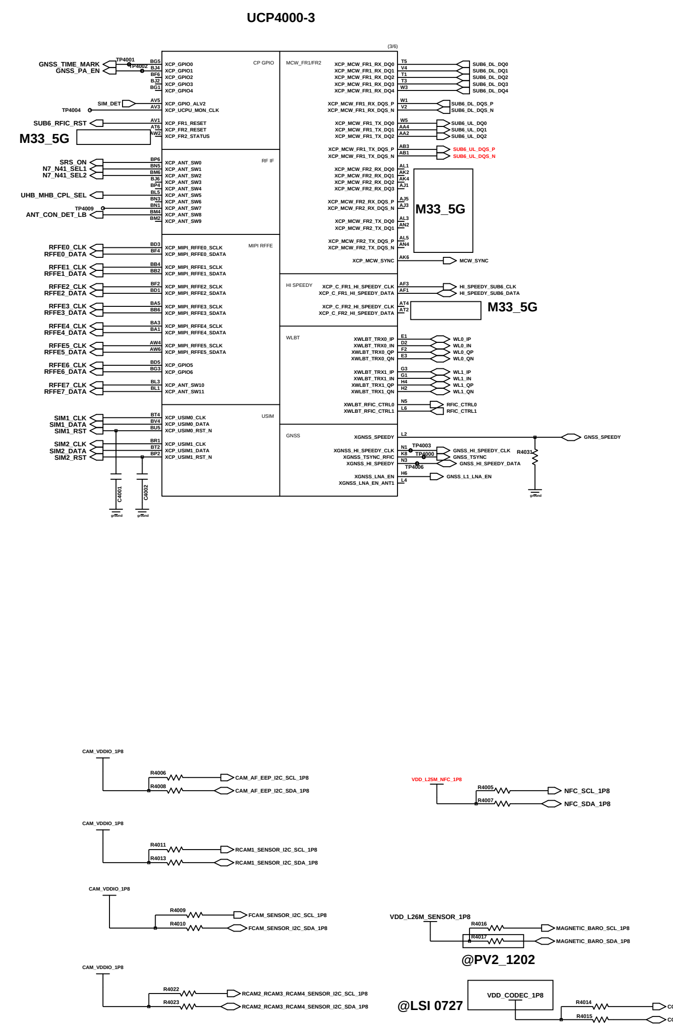


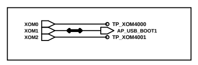


| PIN [3:1] | Function | |
|---|---|---|
| OM[2:0] | 1st Boot | 2nd Boot |
| 000 | UFS | USB |
| 001 | ----- | USB |
| 010 | USB | ----- |
| 100 | SD | USB |

**iROM BOOT**

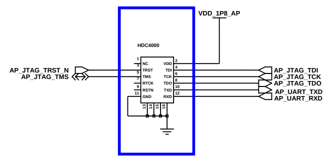


**AP JTAG**

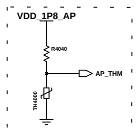


**AP_THM**

## SYSTEM CLOCK

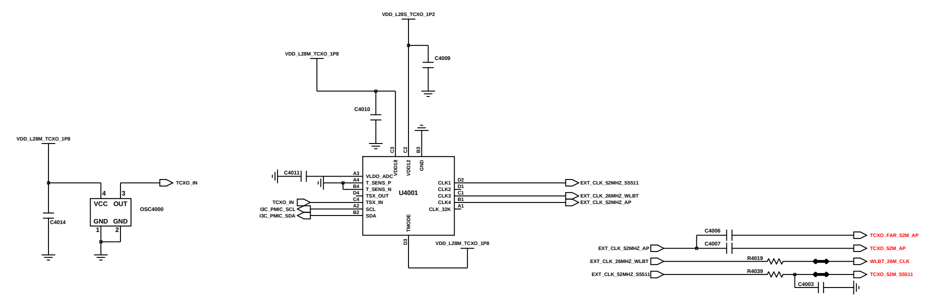

## PCB JTAG

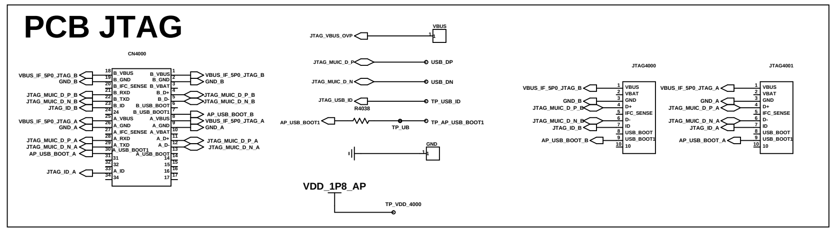


M33 5G

SAMSUNG CONFIDENTIAL
THIS DOCUMENT CONTAINS CONFIDENTIAL PROPRIETARY INFORMATION THAT IS SAMSUNG ELECTRONICS CO'S PROPERTY. DO NOT DISCLOSE TO OR DUPLICATE FOR OTHERS EXCEPT AS AUTHORIZED BY SAMSUNG.

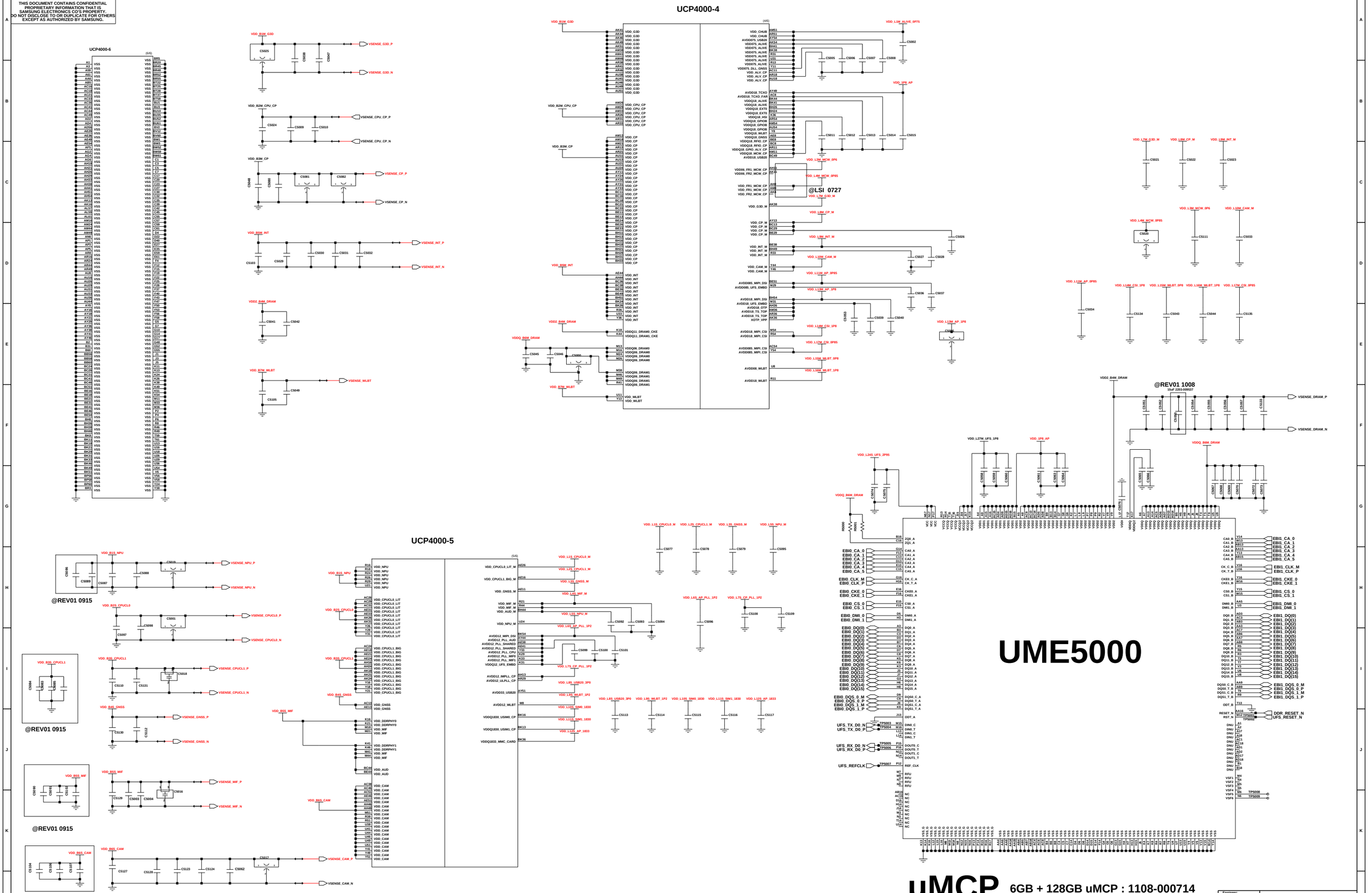

SAMSUNG CONFIDENTIAL
THIS DOCUMENT CONTAINS CONFIDENTIAL
AND PROPRIETARY INFORMATION OF
SAMSUNG ELECTRONICS CO'S PROPERTY.
DO NOT DISCLOSE TO OR DUPLICATE FOR OTHERS
EXCEPT AS AUTHORIZED BY SAMSUNG.

# PMIC

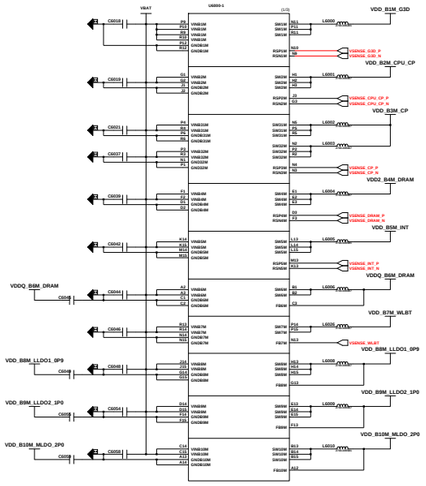


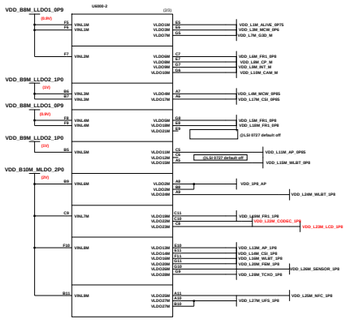


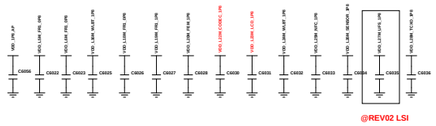


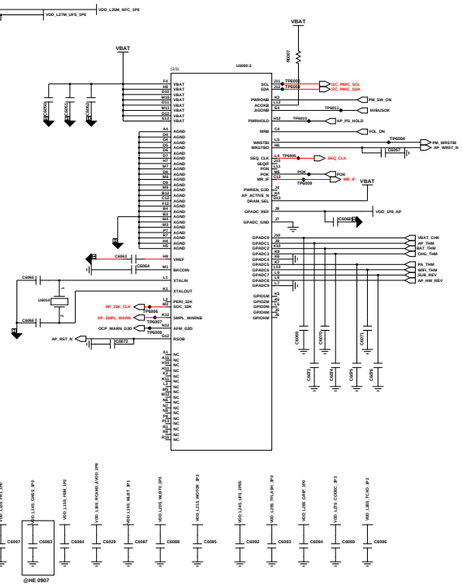


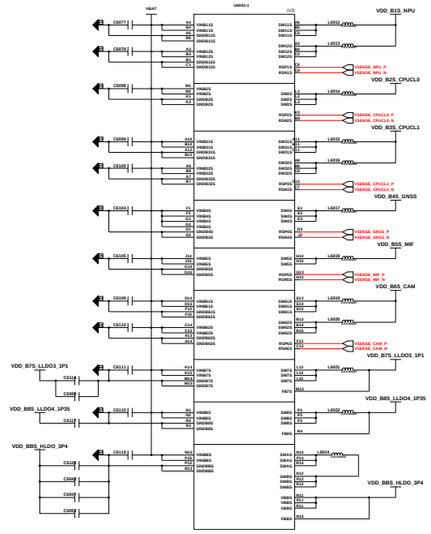


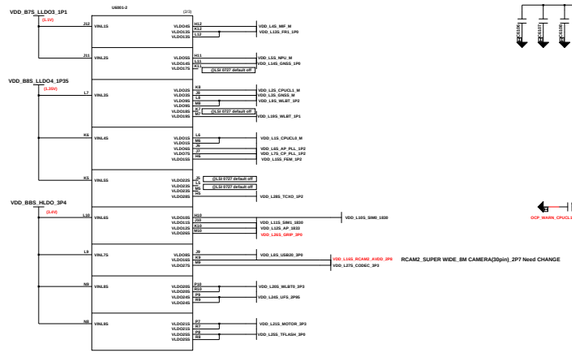


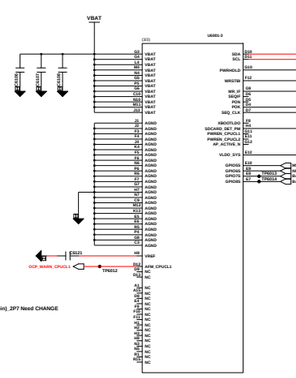

# DIRECT CHARGER

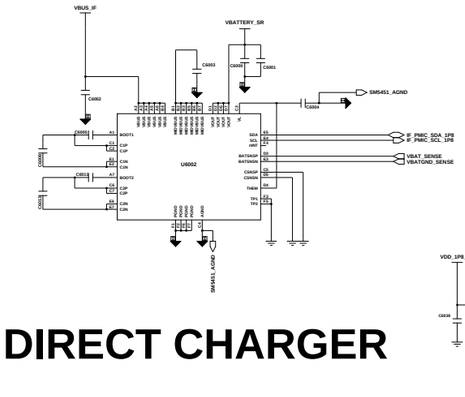


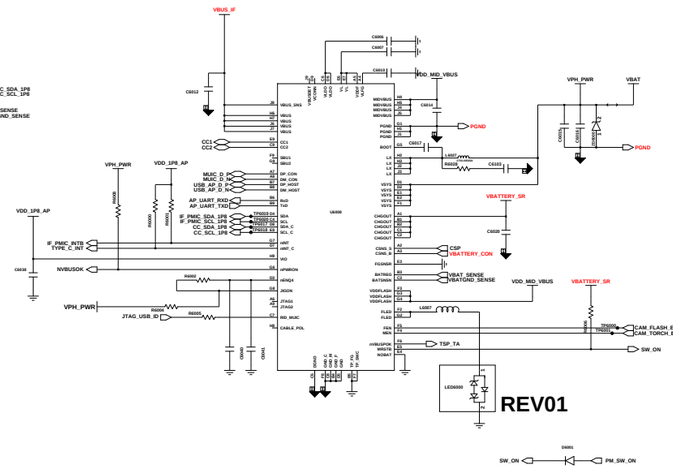

# IF PMIC

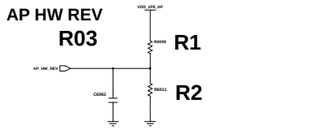


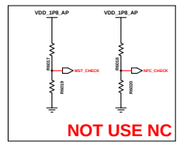


| REV | R1(Kohm) | R2(Kohm) | AP | |
|---|---|---|---|---|
| 0 | NC | 0 | R00 | |
| 1 | 430 | 30 | R01 | |
| 2 | 390 | 62 | R02 | |
| 3 | 360 | 91 | R03 | |
| 4 | 330 | 120 | | |
| 5 | 300 | 150 | | |
| 6 | 270 | 180 | | |
| 7 | 240 | 220 | | |
| 8 | 200 | 240 | | |
| 9 | 180 | 270 | | |
| 10 | 150 | 300 | | |

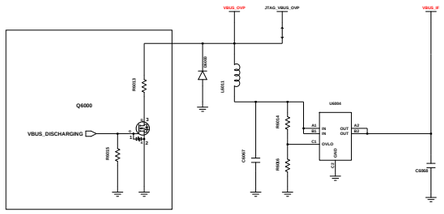


# OVP

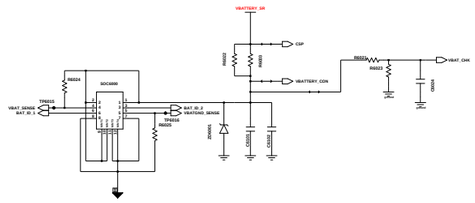


# BATTERY CON

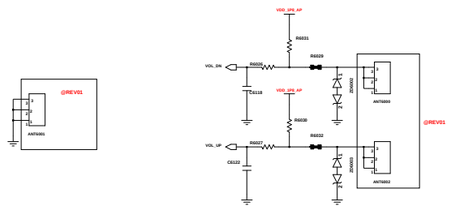


# VOL KEY

| | | | |
|---|---|---|---|
| Engineer: | M33 5G | | |
| Drawn by: | | | |
| R&D CHK: | TITLE: POWER/MOT/KEY | | Size: |
| DOC CTRL CHK: | | | |
| MFG DOCR CHK: | | | |
| Changed by: | Date Changed: | Time Changed: | QA CHK: |
| REV: | Drawing Number: | | |

SAMSUNG CONFIDENTIAL
THIS DOCUMENT CONTAINS CONFIDENTIAL PROPRIETARY INFORMATION THAT IS SAMSUNG ELECTRONICS CO'S PROPERTY. DO NOT DISCLOSE TO OR DUPLICATE FOR OTHERS EXCEPT AS AUTHORIZED BY SAMSUNG.

# AUDIO & SENSOR PART

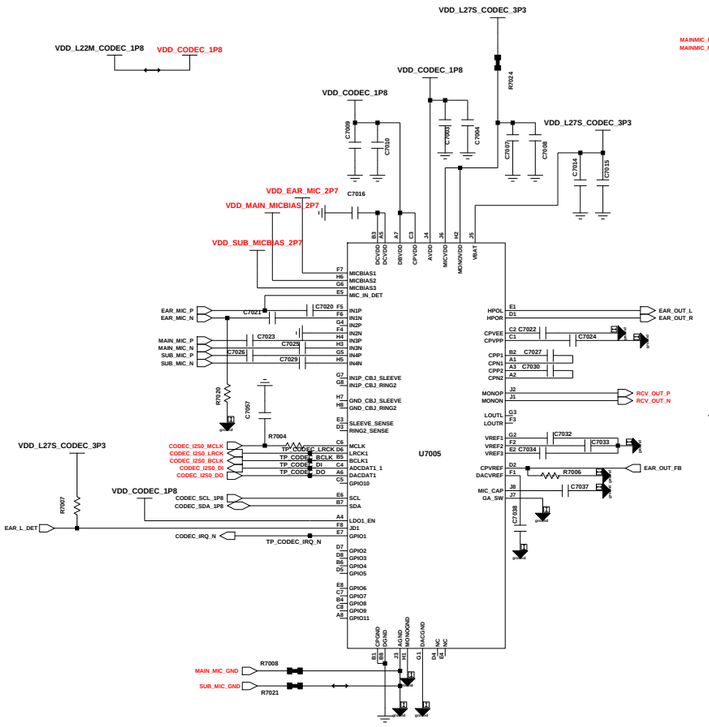


## Audio CODEC

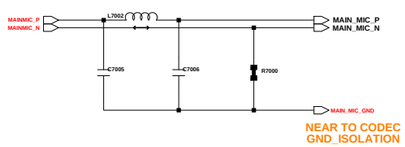


## MAIN MIC

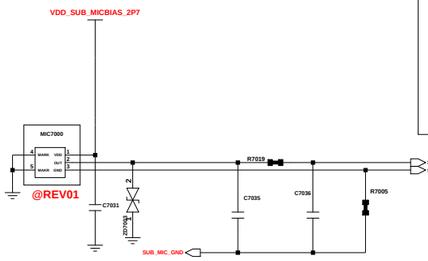


## 2nd MIC

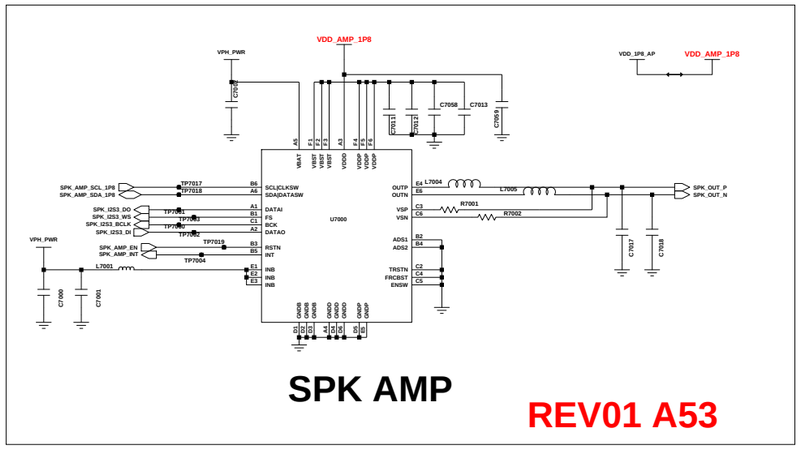


## SPK AMP

REV01 A53

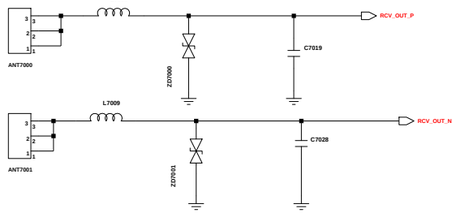


## RCV CONTACT

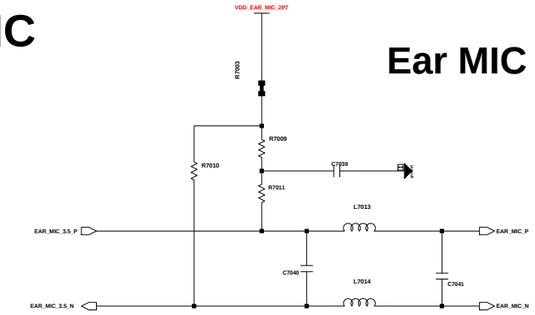


## Ear MIC

## SENSOR

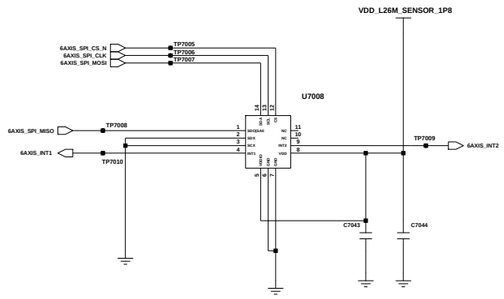


## ACC&GYRO SENSOR

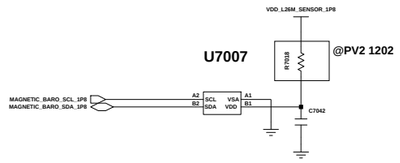


## MAGNETIC SENSOR

# DUAL SIM / T-FLASH (3in3)

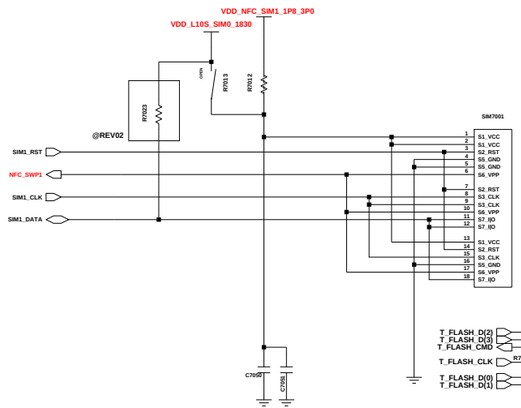


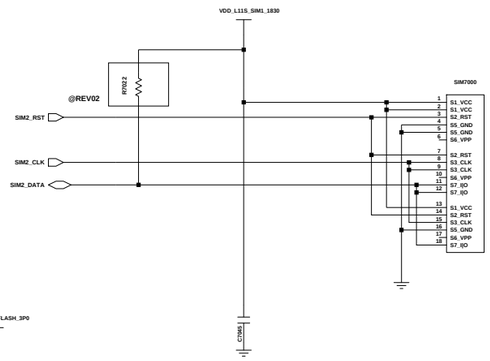


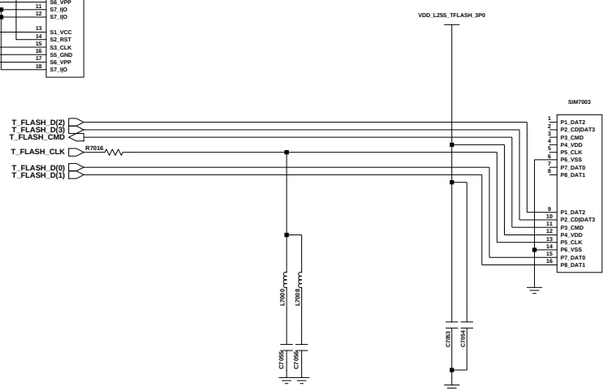


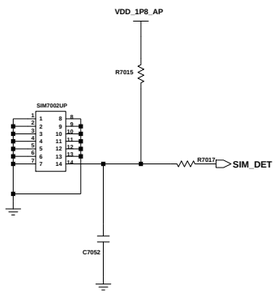


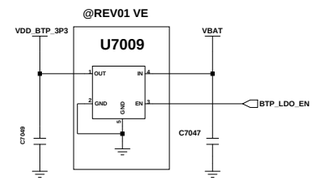


## FPS PWR

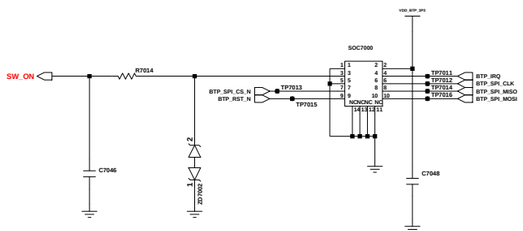


## PWR & SIDE FPS

| | |
|---|---|
| Engineer: | M33 5G |
| Drawn by: | |
| R&D CHK: | TITLE: |
| DOC CTRL CHK: | |
| MFG ENGR CHK: | |

| Changed by: | Date Changed: | Time Changed: | QA CHK: | REV: | Drawing Number: | Size: | Page: |
|---|---|---|---|---|---|---|---|

SAMSUNG CONFIDENTIAL
THIS DOCUMENT CONTAINS CONFIDENTIAL PROPRIETARY INFORMATION THAT IS SAMSUNG ELECTRONICS CO'S PROPERTY. DO NOT DISCLOSE TO OR DUPLICATE FOR OTHERS EXCEPT AS AUTHORIZED BY SAMSUNG.

# CAMERA

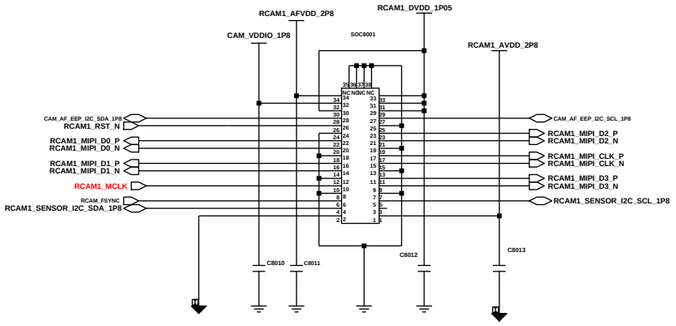


## RCAM1_50M CAMERA(34PIN)_S5KJN1

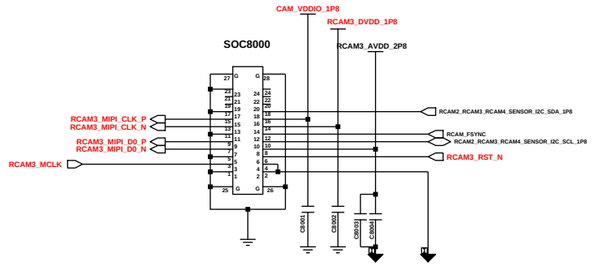


## RCAM3_2M_BOKEH_GC02M1B_24pin

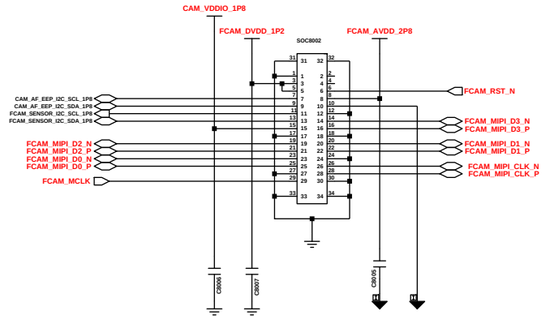


## FRONT_8M CAMERA (30PIN)

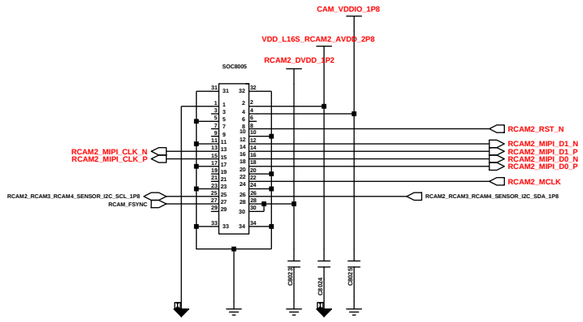


## RCAM2_5M_UW_30pin

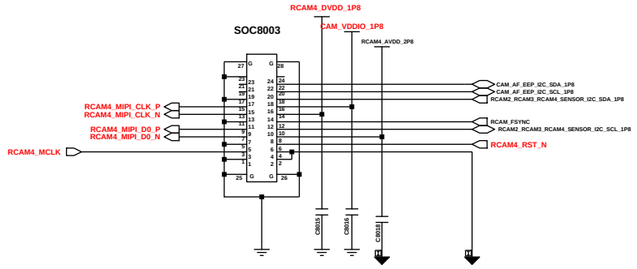


## RCAM4_2M_MACRO_GC02M1_24pin

# CAM PMIC

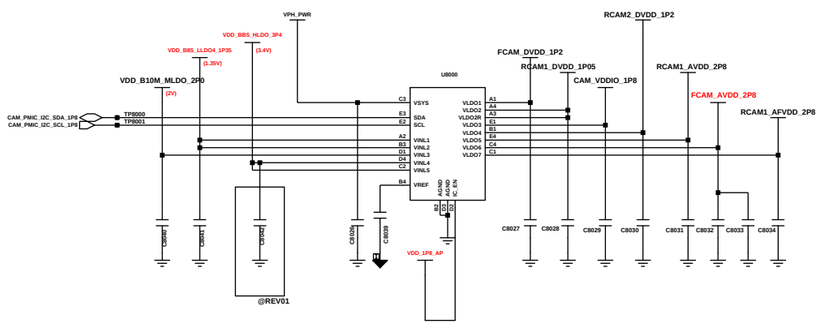


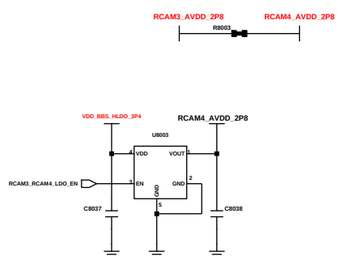


## RCAM3_RCAM4_AVDD

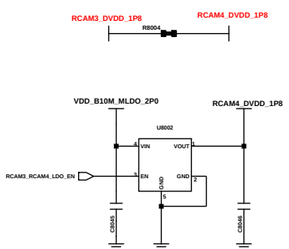


## RCAM3_RCAM4_DVDD

| | |
|---|---|
| Engineer: | M33 5G |
| Drawn by: | |
| R&D CHK: | TITLE: CAMERA |
| DOC CTRL CHK: | |
| MFG ENGR CHK: | |
| QA CHK: | |

Size: | REV | Drawing Number: | Page: 78

Changed by: | Date Changed: | Time Changed:

SAMSUNG CONFIDENTIAL
THIS DOCUMENT CONTAINS CONFIDENTIAL PROPRIETARY INFORMATION THAT IS SAMSUNG ELECTRONICS CO'S PROPERTY. DO NOT DISCLOSE TO OR DUPLICATE FOR OTHERS EXCEPT AS AUTHORIZED BY SAMSUNG.

# C2C (Conn to Conn FPCB)

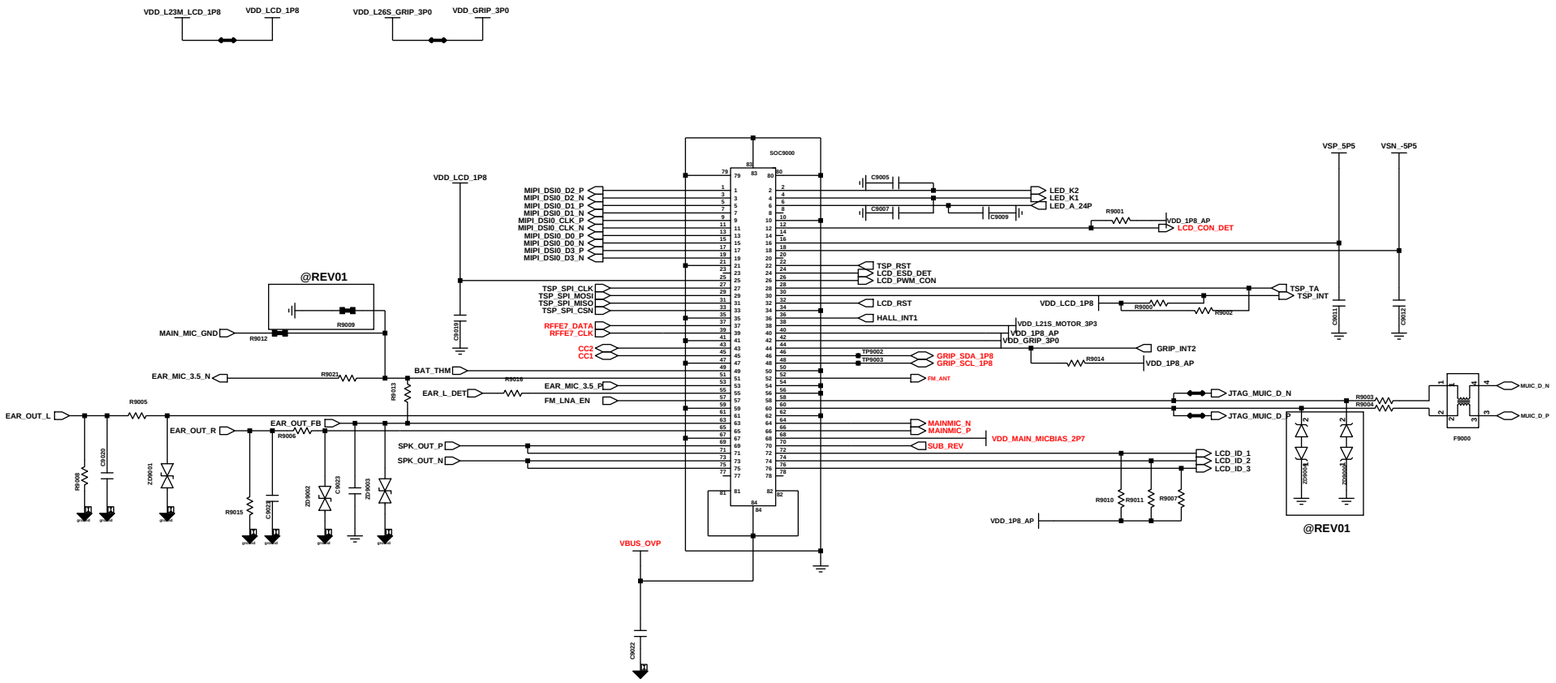


# DISPLAY

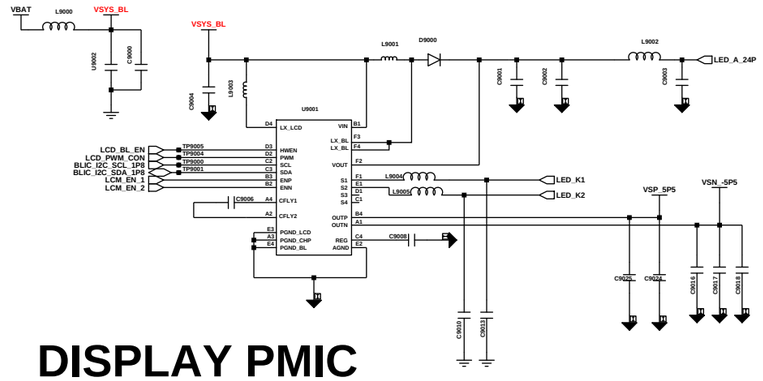


## DISPLAY PMIC

## SHIELD CAN/BOTH HOLE

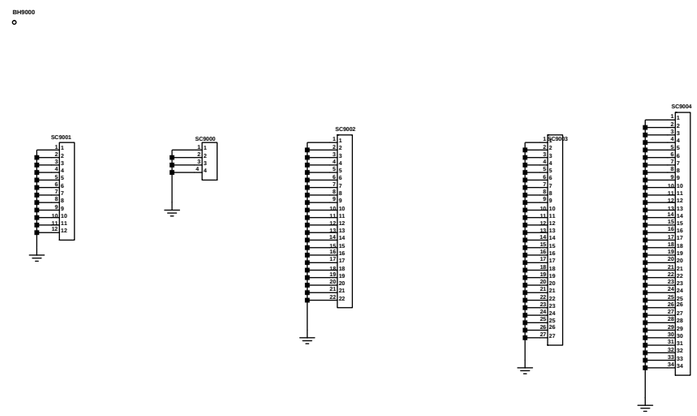


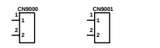


## 2D BARCODE

| REGION | | MEMORY | | |
|---|---|---|---|---|
| R9017 | SM-M336B ( SEA ,MEA, LA) ( CIS, EUR , HK, TW) | R9022 | 6/128 | |
| R9019 NC | SM-M336BU (SWA, BAT 6000mAh) | R9023 NC | 8/128 | |
| R9018 NC | SM-M336K (KT) | | | |
| | | | | |
| | | | | |

Sorder
SM-M336B - R9017,R9022
SM-M336BU - R9019, R9023

| | |
|---|---|
| Engineer: | M33 5G |
| Drawn by: | |
| R&D CHK: | TITLE: |
| DOC CTRL CHK: | |
| MFG ENGR CHK: | |
| QA CHK: | REV: Drawing Number: Page: |

Changed by: user20 | Date Changed: Thursday, June 18, 2015 | Time Changed: 10:18:28 am

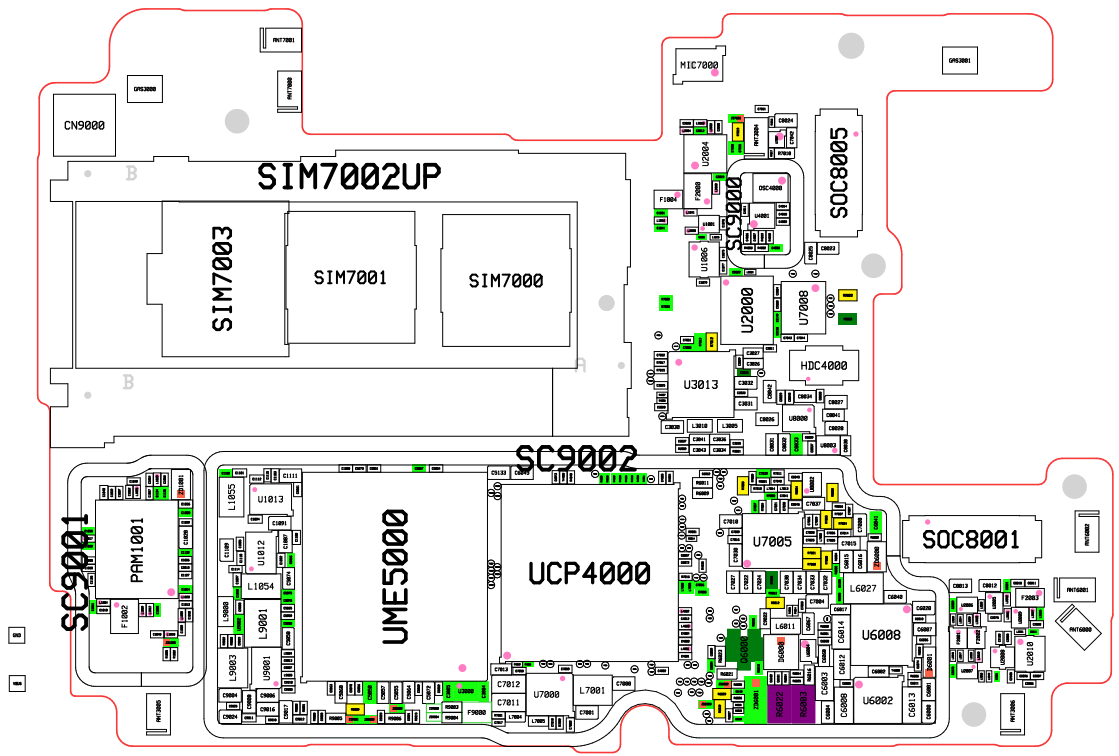


# SM-M336B/BU COMMON

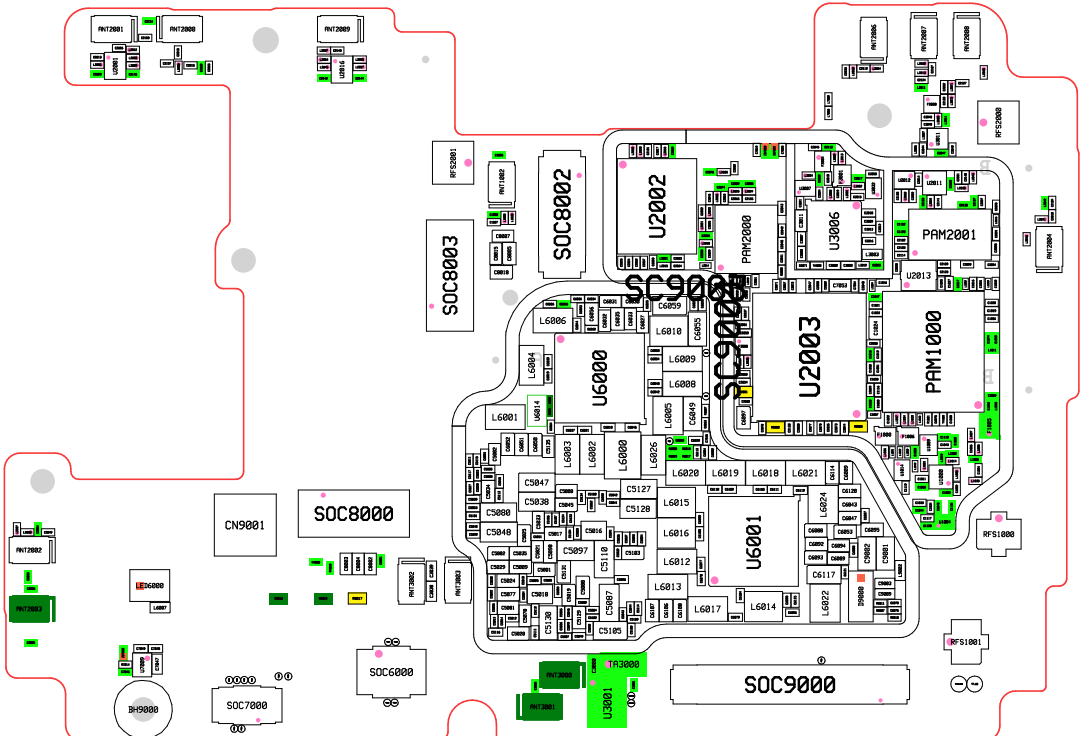


# SM-M336B/BU COMMON

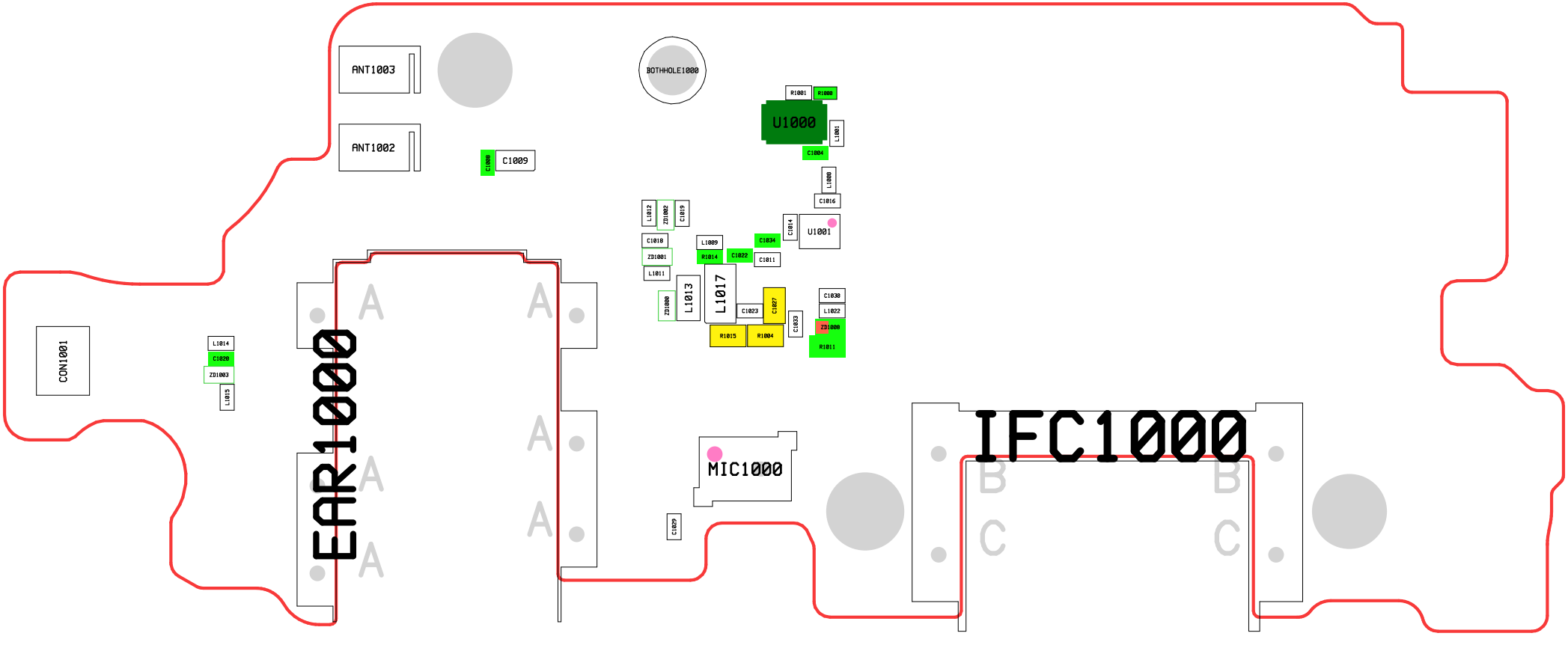


# SM-M336B/BU COMMON

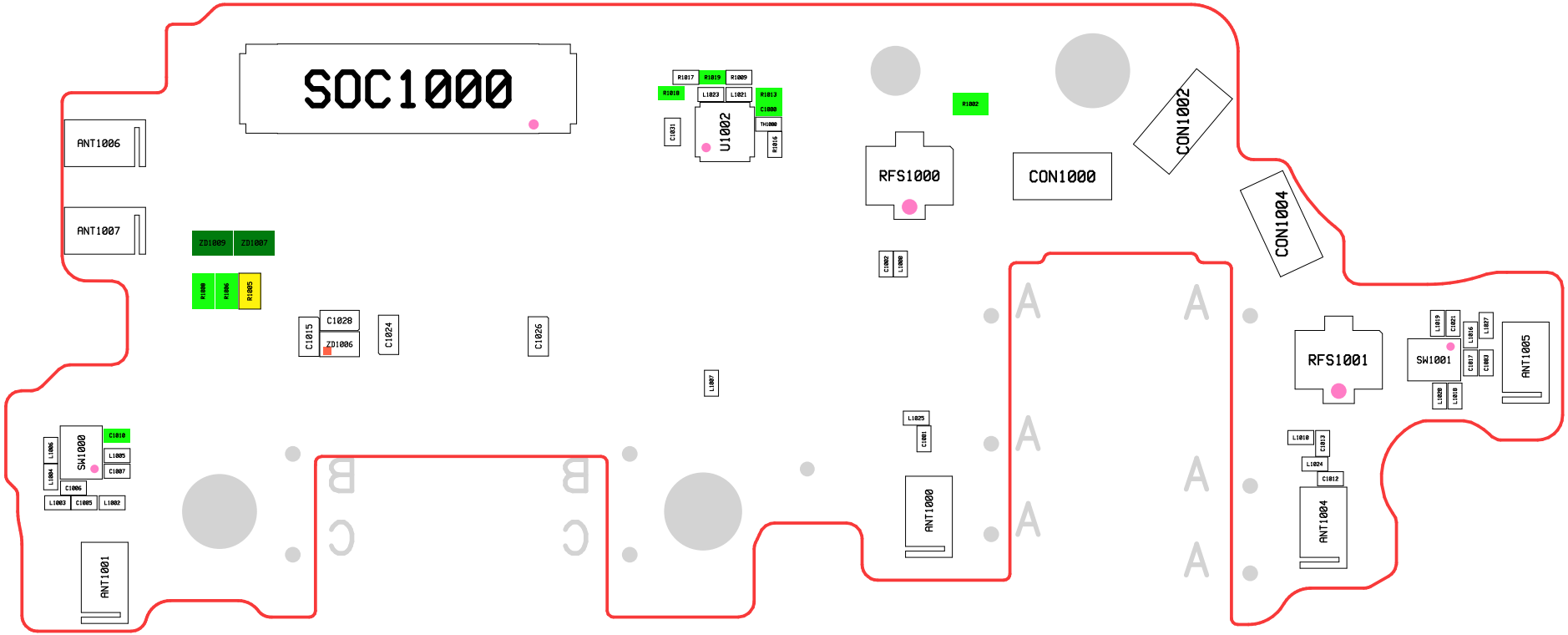


# SM-M336B/BU COMMON